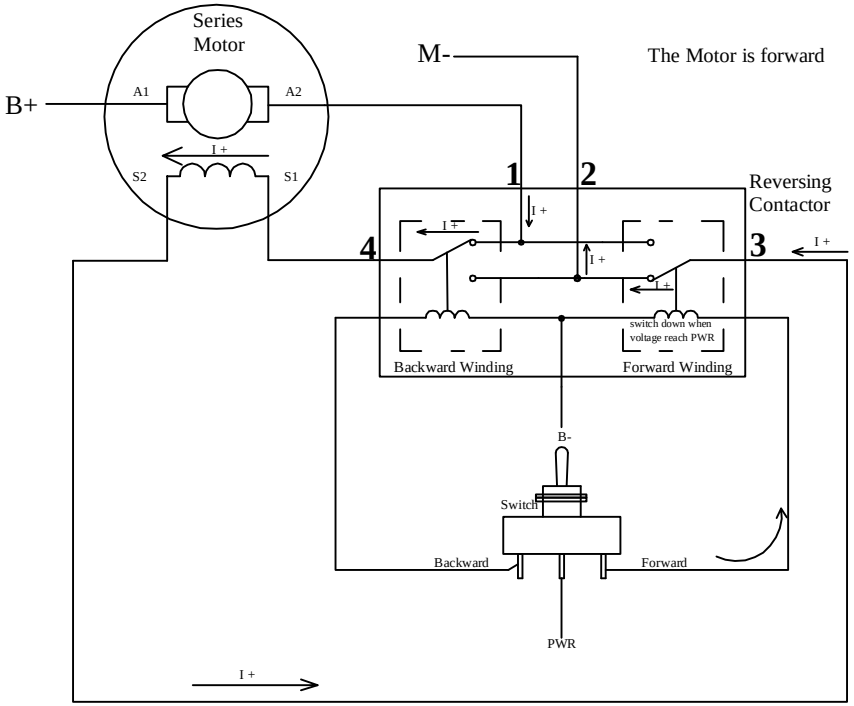

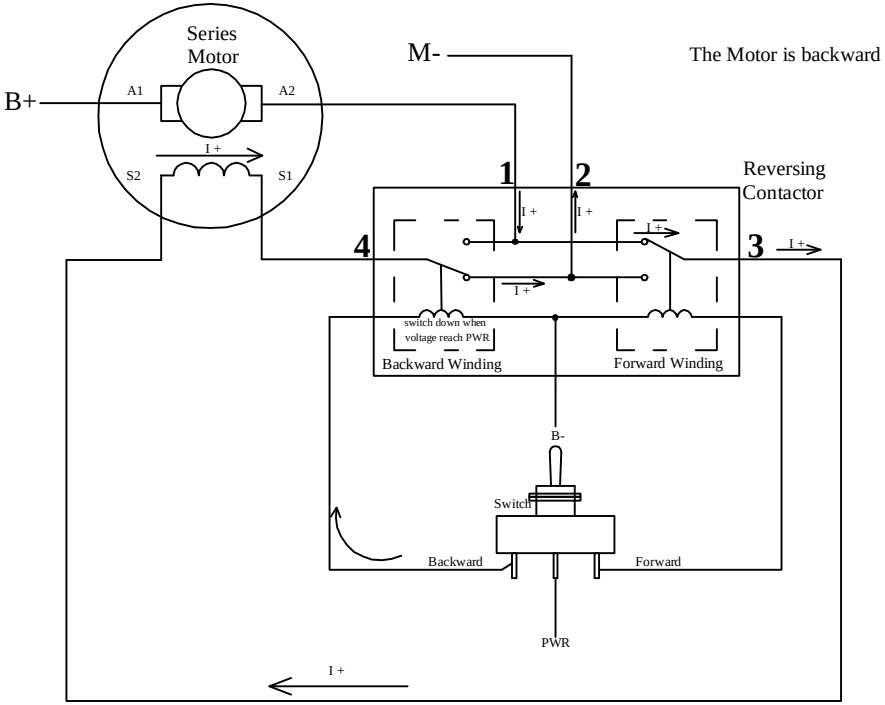

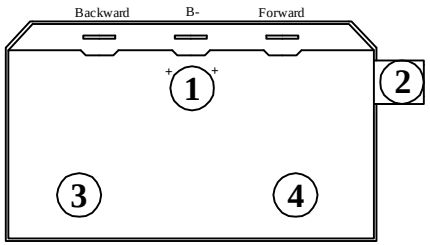

								KELLY CONTROLS, LLC
Mark		Subarea	Signatory		Date			Reversing contactor principle
Design			Stand			modification	Number	Proportion
Assessor								
Technics			Authorize					
						Sum		